Digital I/O board, optically isolated, 32 digital inputs and outputs, 24 V / 12 V

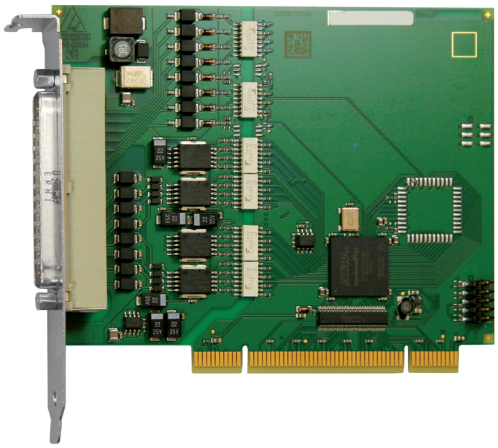

APCI-1500 / APCI-1500-12V

16 digital inputs, 24 V or 12 V, including 14 interruptible inputs

16 digital outputs, 10-36 V, 500 mA/channel

Optical isolation 1000 V

Input and output filters

Watchdog, counter/timer

At Power-On the outputs are reset to "0"

RoHS 2011/65/EU

PCI 32-bit

Also for PCI EXPRESS® See APCIe-1500

Also for CompactPCI® Serial
See CPCIs-1500

Also for CompactPCI™
See CPCI-1500

Also for PC/104-PLUS
See PC104-PLUS1500

Windows
64/32-bit drivers

Features

- 3 programmable counter/timer
- Connector and software compatible to the digital I/O boards APCIe-1532 for the PCI Express bus and CPCI-1500 for the CompactPCI bus.
- Monitoring program for testing and setting the board functions

Inputs

- 16 optically isolated digital inputs, 24 V or 12 V (APCI-1500-12V), including 14 interruptible inputs
- Reverse voltage protection
- All inputs are filtered

Outputs

- 16 optically isolated digital outputs, 10 V to 36 V
- Output current per channel 500 mA
- Timer programmable as watchdog for resetting the outputs to "0"
- Diagnostic report through status register at short-circuits, over-temperature, external supply voltage drop or watchdog
- Interrupt triggered through watchdog, timer, error (short-circuit, overtemperature, ext. supply voltage drop)
- At Power-On, reset of the outputs to "0"
- Current limit for 16 outputs ~ 3 A typ.
- Short-circuit current per output ~1.5 A max.
- Self-resetting fuse (electronic fuse)
- Overtemperature and overvoltage protection
- 24 V power outputs with protection diodes and filters
- Output capacitors against electromagnetic emissions
- External 24 V voltage supply screened and filtered
- Shutdown logic: outputs are switched off and an interrupt is generated when the external supply voltage drops below approx. 6 V

Safety features

- Optical isolation 1000 V
- Creeping distance IEC 61010-1
- Protection against fast transients (burst), overvoltage, electrostatic discharge and high-frequency EMI
- Separate ground lines for inputs and outputs

Applications

- Industrial I/O control
- PLC coupling
- Reading of encoder values for process control
- Signal switching
- Interface to electromechanical relays
- ON/OFF monitoring of motors, lights...
- Watchdog / Timer
- Machine interfacing, ...

Software drivers

Standard drivers for:

- Linux
- 32-bit drivers for Windows 8 / 7 / Vista / XP / 2000
- Signed 64-bit drivers for Windows 8 / 7 / XP
- Real-time use with Linux and Windows on request

Drivers and samples for the following compilers and software packages:

- Microsoft C++ • Microsoft C
- Borland C++ • Borland C
- Visual Basic • Delphi
- .NET on request
- LabVIEW • LabWindows/CVI • DASYLab • DIAdem

On request:

Further operating systems, compilers and samples.

Driver download: www.addi-data.com/downloads

Phone: +49 7229 1847-0 info@addi-data.com
Fax: +49 7229 1847-222 www.addi-data.com

ADDI-DATA
SPIRIT OF EXCELLENCE

Specifications

Digital inputs

Number of inputs:	16 (common ground acc. to IEC 1131-2)
Including interruptible inputs:	14 (inputs 1–14)
Optical isolation:	Through opto-couplers, 1000 V from PC to peripheral
Compare logic:	AND and OR mode; OR priority
24 V version (APCI-1500)	
Nominal voltage:	24 V
Input current at 24 V:	6 mA
Logic input levels:	U nominal: 24 V
UH max.:	30 V/current 9 mA typ.
UH min.:	19 V/current 2 mA typ.
UL max.:	14 V/current 0.7 mA typ.
UL min.:	0 V/current 0 mA typ.
Maximum input frequency:	5 kHz (at 24 V)
12 V version (APCI-1500-12V)	
Nominal voltage:	12 V
Input current at 12 V:	4.2 mA
Logic input levels:	U nominal: 12 V
UH max.:	16 V/current 6.3 mA typ.
UH min.:	9 V/current 2.7 mA typ.
UL max.:	6 V/current 1.2 mA typ.
UL min.:	0 V/current 0 mA typ.
Maximum input frequency:	5 kHz

Digital outputs

Number of outputs:	16, optically isolated up to 1000 V through opto-couplers
Output type:	High-side (load to ground) acc. to IEC 1131-2
Nominal voltage:	24 V / 12 V (APCI-1500-12V)
Supply voltage:	10 V to 36 V (via front connector)
Max. current for 16 outputs:	3 A
Output current/output:	500 mA max.
Short-circuit current/output:	shutdown at 24 V, R_{load} = 0.1 Ω: 1.5 A max.
RDS ON resistance:	0.4 Ω max.
Switch-on time:	100 µs typ.
Switch-off time:	60 µs typ.
Overtemperature (shutdown):	170 °C (output driver) typ.
Temperature hysteresis:	20 °C (output driver) typ.

Safety

Shutdown logic:	When the external supply voltage drops below approx. 6 V (Typical value, measured at ~6 V): the outputs are switched off and an interrupt / status bit is generated
Diagnostics:	Status bit or interrupt to the PC (short-circuit, overtemperature, external supply voltage drop, watchdog)
Counter/Timer:	3
Watchdog:	Timer-programmable, 10 µs to 37 s

EMC – Electromagnetic compatibility

The product complies with the European EMC directive. The tests were carried out by a certified EMC laboratory in accordance with the norm from the EN 61326 series (IEC 61326). The limit values as set out by the European EMC directive for an industrial environment are complied with. The respective EMC test report is available on request.

Physical and environmental conditions

Dimensions:	131 x 100 mm
System bus:	PCI 32-bit 3.3/5 V acc. to specification 2.1 (PCISIG)
Space required:	1 PCI slot
Operating voltage:	+5 V, ± 5 % from the PC
Current consumption:	400 mA typ. ± 10 %
Front connector:	37-pin D-Sub male connector
Temperature range:	0 to 60 °C (with forced cooling)

Simplified block diagram

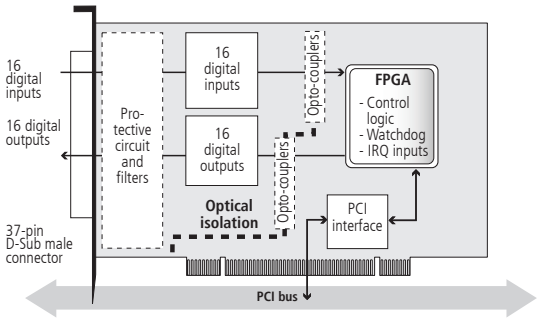

Pin assignment – 37-pin D-Sub male connector

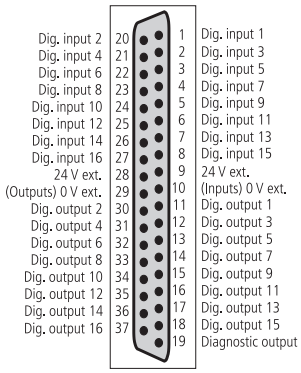

ADDI-DATA connection

Example 1
Connection of the inputs and outputs through screw terminal panels

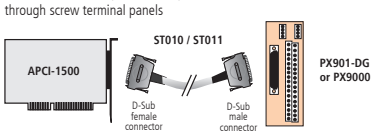

Example 2
- Connection of the inputs through screw terminal panel PX901-DG
- Connection of the outputs through relay output board PX8500-G cascaded in 16 relays

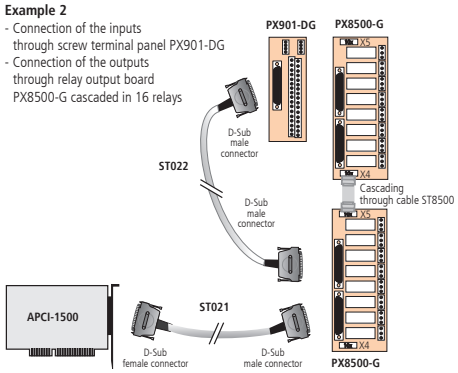

Ordering information

APCI-1500 / APCI-1500-12V

Digital I/O board, optically isolated, 32 digital inputs and outputs, 24 V / 12 V. Incl. technical description, software drivers and monitoring program.

Versions

APCI-1500:	Digital I/O board, opt. isolated, 32 dig. I/O, 24 V inputs, outputs 10 to 36 V
APCI-1500-12V:	Digital I/O board, opt. isolated, 32 dig. I/O, 12 V inputs, outputs 10 to 36 V

Accessories

PX901-D:	Screw terminal panel, LED status display
PX901-DG:	Screw terminal panel, LED status display, for DIN rail
PX9000:	3-row screw terminal panel for DIN rail, LED status display
PX8500-G:	Relay output board for DIN rail, cascadable
ST010:	Standard round cable, shielded, twisted pairs, 2 m
ST011:	Standard round cable, shielded, twisted pairs, 5 m
ST010-S:	Same as ST010, for high currents (separate 24 V supply)
ST021:	Round cable between APCI-1500 and PX8500-G, shielded, twisted pairs, 2 m
ST022:	Cable between PX8500-G and PX901-DG, shielded, 2 m
ST8500:	Ribbon cable for cascading two PX 8500