ADDI-DATA®
PARTNER FÜR PRÄZISION

Technical Description

APCIe-1016, APCIe-1502, APCIe-1516, APCIe-1532 and CPCIs-1532

Digital I/O board, optically isolated

DIN EN ISO 9001:2015 certified

Edition: 03.06-03/2022

Product information

This manual contains the technical installation and important instructions for correct commissioning and usage, as well as production information according to the current state before printing.
The content of this manual and the technical product data may be changed without prior notice.
ADDI-DATA GmbH reserves the right to make changes to the technical data and the materials included herein.

Warranty and liability

The user is not authorised to make changes to the product beyond the intended use, or to interfere with the product in any other way.
ADDI-DATA shall not be liable for obvious printing and phrasing errors.
In addition, ADDI DATA, if legally permissible, shall not be liable for personal injury or damage to materials caused by improper installation and/or commissioning of the product by the user or improper use; for example, if the product is operated despite faulty safety and protection devices, or if notes in the operating instructions regarding transport, storage, installation, commissioning, operation, limit values, etc. are not taken into consideration.
Liability is further excluded if the operator changes the product or the source code files without authorisation and/or if the operator is guilty of not monitoring the permanent operational capability of working parts and this has led to damage.

Copyright

This manual, which is intended for the operator and its staff only, is protected by copyright.
Duplication of the information contained in the operating instructions and of any other product information, or disclosure of this information for use by third parties, is not permitted, unless this right has been granted by the product licence issued. Non-compliance with this could lead to civil and criminal proceedings.

ADDI-DATA software product licence

Please read this licence carefully before using the standard software! The customer is only granted the right to use this software if he/she agrees with the conditions of this licence.
The software may only be used to set up the ADDI-DATA products.
Reproduction of the software is forbidden (except for back-up and for exchange of faulty data carriers). Disassembly, decompilation, decryption and reverse engineering of the software are forbidden. This licence and the software may be transferred to a third party if this party has acquired a product by purchase, has agreed to all the conditions in this licence contract and the original owner does not keep any copies of the software.

Trademarks

- ADDI-DATA, APCI-1500, MSX-Box and MSX-E are registered trademarks of ADDI-DATA GmbH.
- Turbo Pascal, Delphi, Borland C, Borland C++ are registered trademarks of Borland Software Corporation.
- Microsoft .NET, Microsoft C, Visual C++, MS-DOS, Windows 7, Windows 10, Windows Server 2000, Windows Server 2003, Windows Embedded and Internet Explorer are registered trademarks of Microsoft Corporation.
- Linux is a registered trademark of Linus Torvalds.
- LabVIEW, LabWindows/CVI, DASYLab, DIAdem are registered trademarks of National Instruments Corporation.
- CompactPCI is a registered trademark of PCI Industrial Computer Manufacturers Group.
- VxWorks is a registered trademark of Wind River Systems, Inc.
- RTX is a registered trademark of IntervalZero.



Warning!

The following risks result from the improper implementation of the board and from use contrary to the regulations:



Personal injury



Damage to the board, the PC and peripherals



Pollution of the environment.

- Protect yourself, others and the environment!
- Read the safety precautions (yellow leaflet) carefully!

  If this leaflet is not enclosed with the documentation, please contact us and ask for it.
- Observe the instructions of this manual!

  Make sure that you do not forget or skip any step!
  We are not liable for damages resulting from the wrong use of the board.
- Pay attention to the following symbols:



NOTICE!
Designates hints and other useful information.



NOTICE!
Designates a possibly dangerous situation.
If the instructions are ignored, the board, the PC and/or peripherals may be **destroyed**.



WARNING!
Designates a possibly dangerous situation.
If the instructions are ignored, the board, the PC and/or peripherals may be **destroyed** and persons may be **endangered**.

Contents

Warning! ... 3
Chapter overview ... 6
1 Definition of application, user, handling ... 7
1.1 Definition of application ... 7
1.1.1 Intended use ... 7
1.1.2 Usage restrictions ... 7
1.1.3 Limits of use ... 7
1.2 User ... 8
1.2.1 Qualification ... 8
1.2.2 Country-specific regulations ... 8
1.3 Handling of the board ... 8
1.4 Questions and updates ... 9
2 Brief description ... 10
2.1 Technical features ... 10
2.2 Block diagrams ... 11
3 Insertion and installation of the board ... 13
3.1 Insertion of the APCIe board ... 13
3.1.1 Opening the PC ... 13
3.1.2 Selecting a slot ... 13
3.1.3 Inserting the board ... 14
3.1.4 Closing the PC ... 14
3.2 Insertion of the CPCIs board ... 15
3.2.1 Opening the PC ... 15
3.2.2 Selecting a slot ... 15
3.2.3 Inserting the board ... 16
3.3 Connecting the accessories ... 17
3.3.1 Connection of the screw terminal panel ... 17
3.3.2 Pin assignment ... 19
3.3.3 Connection example ... 21
3.4 Driver installation ... 22
4 Function description ... 23
4.1 Digital inputs ... 23
4.2 Digital outputs ... 24
4.3 Interrupt ... 25
4.3.1 Interruptible inputs: Event logic ... 26
4.3.2 Interrupt control ... 26
4.3.3 OR logic ... 26
4.4 Timer, watchdog and counter ... 30
4.4.1 Timer ... 30
4.4.2 Watchdog ... 30
4.4.3 Counter ... 31
5 Standard software ... 33
6 Return or disposal ... 34
6.1 Return ... 34
6.2 Disposal of ADDI-DATA waste equipment ... 35
7 Technical data and limit values ... 36
7.1 Electromagnetic compatibility (EMC) ... 36
7.2 Mechanical structure ... 36
7.3 Versions ... 37
7.4 Limit values l ... 38
7.4.1 Digital inputs ... 38
7.4.2 Digital outputs ... 39

7.4.3 Timer, watchdog and counter 40
8 Appendix 41
8.1 Glossary 41
8.2 Index 43
9 Contact and support 44

Figures

Fig. 1-1: APCIe-1016 and APCIe-15xx: Correct handling 8
Fig. 1-2: CPCIs-1532: Correct handling 9
Fig. 2-1: APCIe-1016: Block diagram 11
Fig. 2-2: APCIe-1502 and APCIe-1532: Block diagram 11
Fig. 2-3: APCIe-1516: Block diagram 12
Fig. 2-4: CPCIs-1532: Block diagram 12
Fig. 3-1: PCI Express slot types 13
Fig. 3-2: Slot: Insert the board 14
Fig. 3-3: PC housing: Fasten the board 14
Fig. 3-4: CPCIs slot types 15
Fig. 3-5: Slot: Insert the board 16
Fig. 3-6: APCIe boards: Connection of the screw terminal panel PX901-DG 17
Fig. 3-7: APCIe-1502, APCIe-1516 and APCIe-1532: Connection of the relay output board 18
Fig. 3-8: CPCIs-1532: Connection of the screw terminal panel PX901-DG 18
Fig. 3-9: CPCIs-1532: Connection of the relay output board PX8500-G 19
Fig. 3-10: APCIe-1016: 37-pin male connector (digital inputs) 19
Fig. 3-11: APCIe-1502, APCIe-1532 and CPCIs-1532: 37-pin male connector (digital I/O) 20
Fig. 3-12: APCIe-1516: 37-pin male connector (digital I/O) 20
Fig. 3-13: Connection example 21
Fig. 4-1: Digital input stage 23
Fig. 4-2: Digital output stage 25
Fig. 4-3: OR logic: Edge change interrupt: 1st condition 27
Fig. 4-4: OR logic: Edge change interrupt: 2nd condition 28
Fig. 4-5: Timer (example) 30
Fig. 4-6: Upward counter cycle 31
Fig. 4-7: Downward counter cycle 32
Fig. 6-1: Serial number 34
Fig. 6-2: Disposal: Label 35
Fig. 7-1: APCIe-1016 and APCIe-15xx: Dimensions 36
Fig. 7-2: CPCIs-1532: Dimensions 36

Tables

Table 2-1: Technical features: Differences 10
Table 3-1: Connection example: Pins (inputs) 21
Table 3-2: Connection example: Pins (outputs) 22
Table 4-1: OR logic 26
Table 4-2: OR logic: Initialisation 27
Table 4-3: OR logic principle for two channels (example) 29
Table 7-1: Versions 37
Table 7-2: Current consumption (typ., without load) 38
Table 7-3: Input current and input frequency (at 24 V) 39
Table 7-4: Input current and input frequency (at 12 V) 39

Chapter overview

In this manual, you will find the following information:

Chapter	Content
1	Important information on the application, the user and on handling the board
2	Brief description of the board (features, block diagrams)
3	Detailed information on the insertion of the board, connection of the accessories (including pin assignment) and driver installation **Tip:** Print out this chapter to have help at hand for inserting and installing the board.
4	Description of the individual functions of the board
5	Standard software: Information on the API software functions
6	Procedure for returning (repairing, etc.) or disposing of the board
7	List of technical data and limit values of the board
8	Appendix with glossary and index
9	Contact and support address

1 Definition of application, user, handling

1.1 Definition of application

1.1.1 Intended use

The boards **APCIe-1016** and **APCIe-15xx**[1] must be inserted in a personal computer (PC) with PCI Express slots which is used as electrical equipment for measurement, control and laboratory pursuant to the standard DIN EN IEC 61010-1.
The board **CPCIs-1532** must be inserted in a CompactPCI Serial computer or corresponding hybrid system with CompactPCI Serial slots which is used as electrical equipment for measurement, control and laboratory pursuant to the standard DIN EN IEC 61010-1.

The used personal computer (PC) must fulfil the requirements of DIN EN IEC 62368-1 and DIN EN 55032 or IEC/CISPR 32 and DIN EN 55024 or IEC/CISPR 24.

The use of the boards **APCIe-1016, APCIe-15xx** and **CPCIs-1532** in combination with external screw terminal panels requires correct installation according to the standard DIN EN IEC 61439-1 (Low-voltage switchgear and controlgear assemblies).

1.1.2 Usage restrictions

The boards **APCIe-1016, APCIe-15xx** and **CPCIs-1532** must not be used as safety-related parts (SRP).

The boards **APCIe-1016, APCIe-15xx** and **CPCIs-1532** must not be used for safety-related functions, such as emergency stop functions.

The boards **APCIe-1016, APCIe-15xx** and **CPCIs-1532** must not be used in potentially explosive atmospheres.

The boards **APCIe-1016, APCIe-15xx** and **CPCIs-1532** must not be used as electrical equipment according to the Low Voltage Directive 2014/35/EU.

1.1.3 Limits of use

All safety information and the instructions in the manual must be followed to ensure proper intended use.

Uses of the board beyond these specifications are considered as improper use. The manufacturer is not liable for damages resulting from improper use.

The board must remain in its anti-static packaging until it is installed.

Please do not delete the identification numbers of the board or the warranty claim will be invalid.

[1] **APCIe-15xx** = **APCIe-1502**, **APCIe-1516** and **APCIe-1532**

1.2 User

1.2.1 Qualification

Only persons trained in electronics are entitled to perform the following works:

- Installation
- Commissioning
- Use
- Maintenance.

1.2.2 Country-specific regulations

Do observe the country-specific regulations regarding

- the prevention of accidents
- electrical and mechanical installations
- Electromagnetic compatibility (EMC).

1.3 Handling of the board

Fig. 1-1: APCIe-1016 and APCIe-15xx: Correct handling

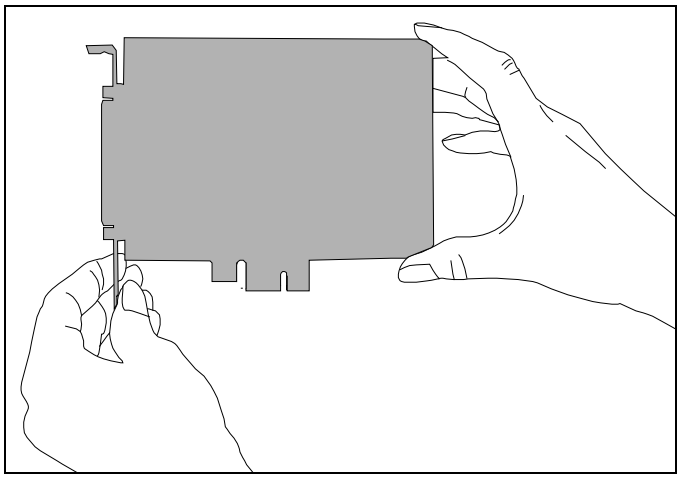

Hold the board cautiously at the outer end and at the slot bracket.
Do not touch the surface of the board!

Fig. 1-2: CPCIs-1532: Correct handling

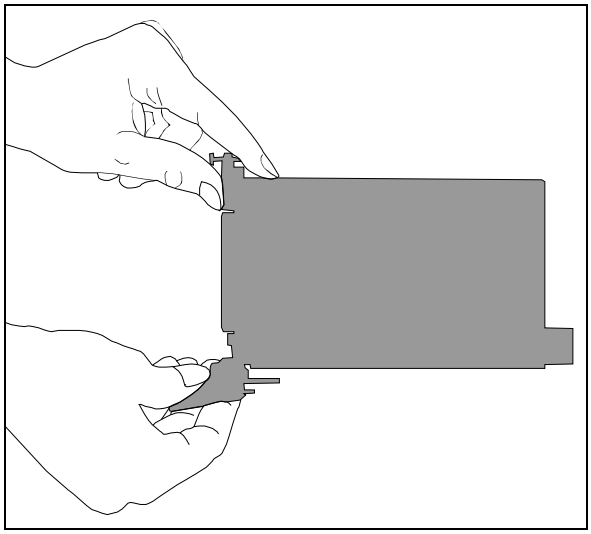

Hold the board cautiously at the outer end and at the front panel. Do not touch the surface of the board!

1.4 Questions and updates

If you have any questions, do not hesitate to call us or to send us an e-mail:

Phone: +49 7229 1847-0
E-mail: info@addi-data.com

Manual and software download from the Internet

The latest versions of the technical manual and the standard software for the board **APCIe-1016, APCIe-15xx** or **CPCIs-1532** can be downloaded for free at: https://drivers.addi-data.com.

NOTICE!
Before using the board and in case of malfunction during operation, check if there is an update (manual, driver) available. Current data can be found on our website or contact us directly.

2 Brief description

2.1 Technical features

Table 2-1: Technical features: Differences

Technical features	APCIe-1016	APCIe-1502	APCIe-1516	APCIe-1532 CPCIs-1532
Digital inputs (24 V)	16	16	8	16
Interruptible inputs	-	15	-	15
Digital outputs (24 V)	-	16	8	16
Timer (12-bit)	-	2	-	2
Watchdog (12-bit)	-	1 (timer 0)	1	1 (timer 0)
Counter (16-bit)	-	2	-	1

Other features:

- Input and output filters
- Inputs: Reverse polarity protection
- Outputs: Shutdown logic when the external 24 V supply voltage drops below 7 V
- Watchdog for resetting the outputs to “0” (these are set to “0” at Power-On)
- Optical isolation
- Separate ground line for inputs and outputs
- Overtemperature and overvoltage protection
- Protection against fast transients (burst), electrostatic discharge and high-frequency EMI
- **CPCIs-1532:** Extended operating temperature range from -40 °C to +85 °C

2.2 Block diagrams

Fig. 2-1: APCIe-1016: Block diagram

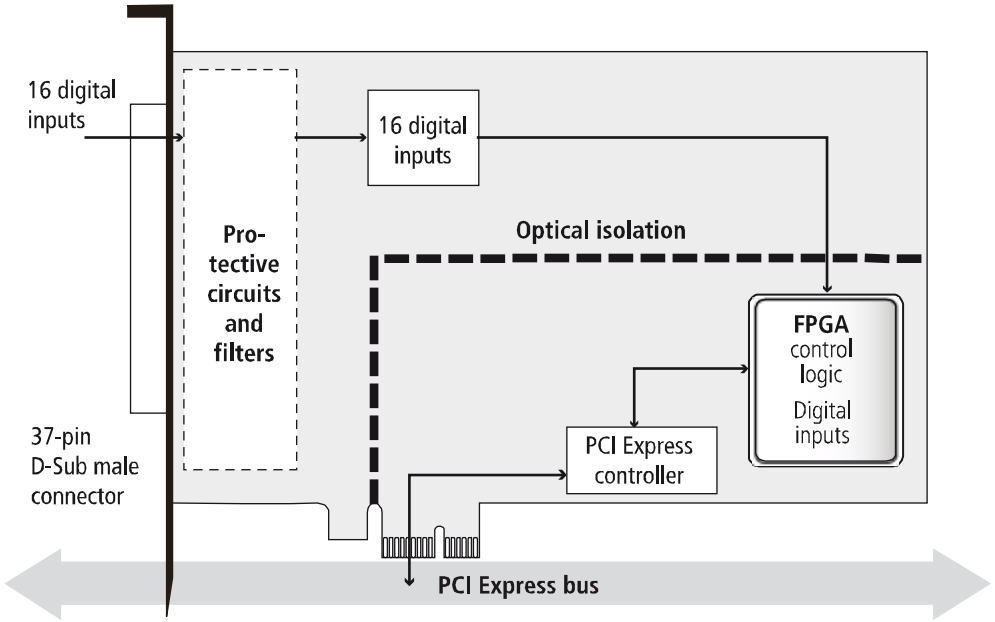

Fig. 2-2: APCIe-1502 and APCIe-1532: Block diagram

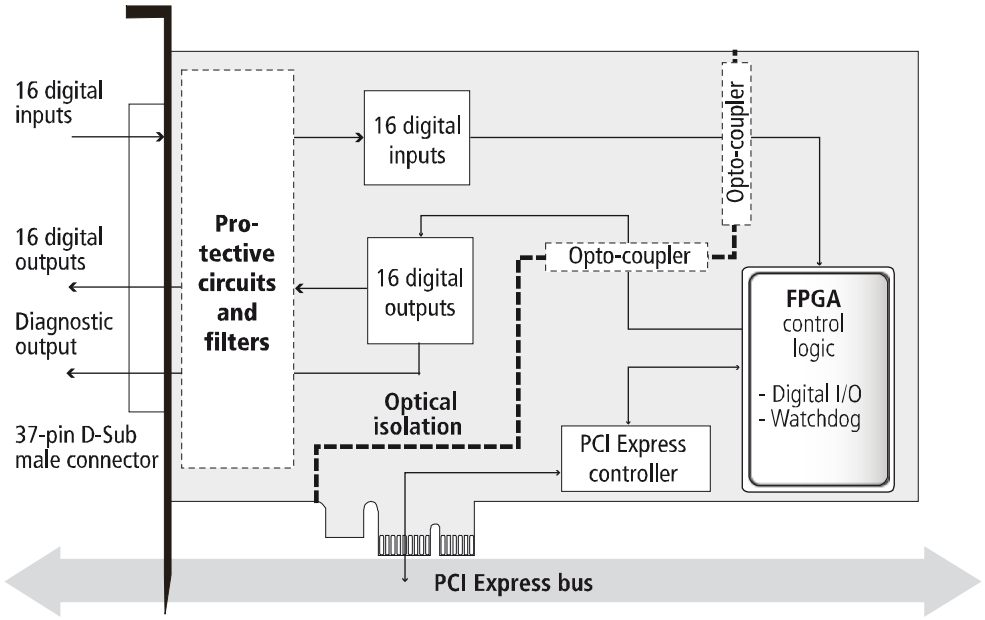

Fig. 2-3: APCIe-1516: Block diagram

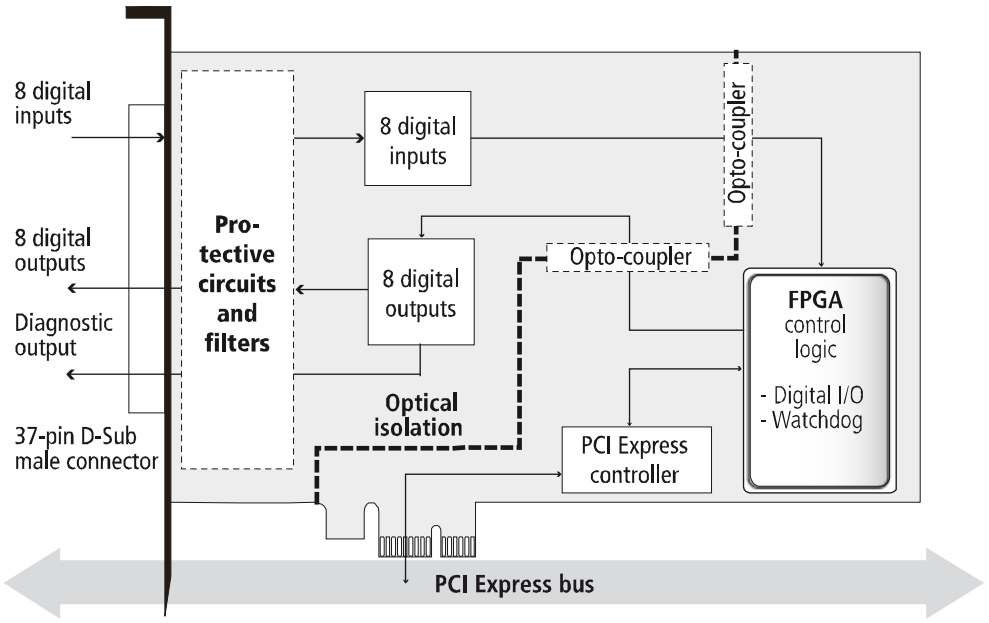

Fig. 2-4: CPCIs-1532: Block diagram

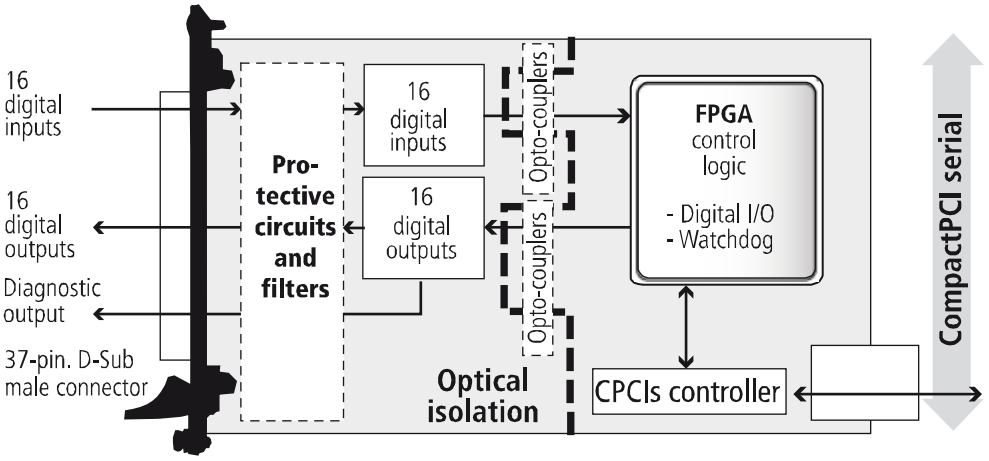

3 Insertion and installation of the board

3.1 Insertion of the APCIe board

Risk of injury!
Be sure to follow the safety precautions!
Improper use of the board may lead to property damage and personal injury.

3.1.1 Opening the PC

- Switch off the PC and all the units connected to it.
- Pull the PC mains plug from the socket.
- Open the PC as described in the manual of the PC manufacturer.

3.1.2 Selecting a slot

- Select a free 1-lane (x1), 4-lane (x4), 8-lane (x8) or 16-lane (x16) PCI-Express slot for the board.

Fig. 3-1: PCI Express slot types

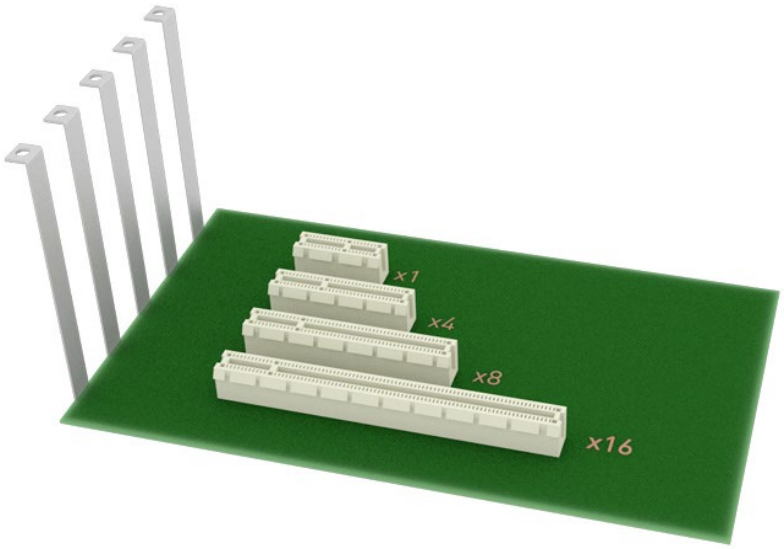

- Unscrew the back cover from the selected slot. For this, follow the operating instructions provided by the PC manufacturer!
  Keep the back cover in a safe place. You will need it if you remove the board.
- Provide for potential equalisation.
- Take the board out of its protective packaging.

3.1.3 Inserting the board

- Insert the board vertically from above into the selected slot.

Fig. 3-2: Slot: Insert the board

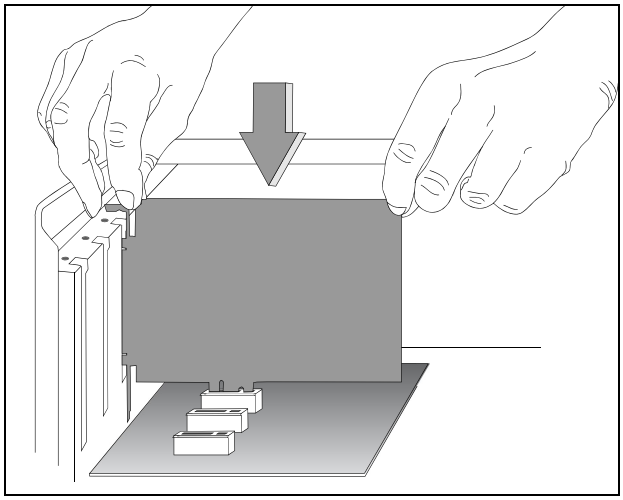

- Fasten the board to the rear of the PC housing using the screw which held the back cover in place.

Fig. 3-3: PC housing: Fasten the board

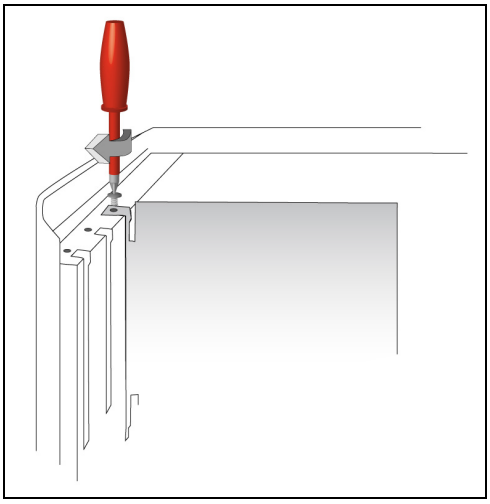

- Tighten all loose screws.

3.1.4 Closing the PC

- Close the PC as described in the manual of the PC manufacturer.

3.2 Insertion of the CPCIs board

Risk of injury!
Be sure to follow the safety precautions!
Improper use of the board may lead to property damage and personal injury.

3.2.1 Opening the PC

- Switch off the CompactPCI Serial system and all the units connected to it.
- Pull the mains plug of the CompactPCI Serial system from the socket.
- Remove the front cover from a free CompactPCI Serial slot.

3.2.2 Selecting a slot

- Select a free CPCIs slot for the board (* P2-P6 = optional).

Fig. 3-4: CPCIs slot types

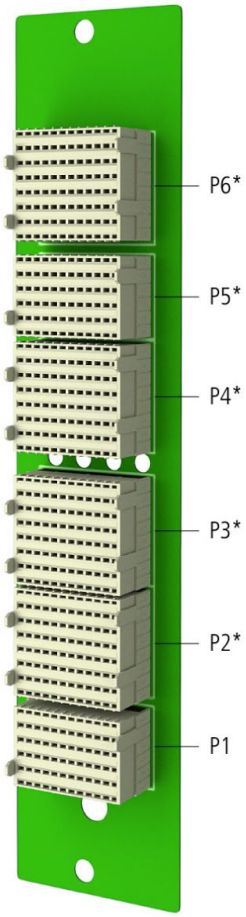

- Provide for potential equalisation.
- Take the board out of its protective packaging.

3.2.3 Inserting the board

- Insert the board into the guiding rails of the rack and push it forward to the rear of the housing. In order to plug it in, a slight resistance has to be overcome.

Fig. 3-5: Slot: Insert the board

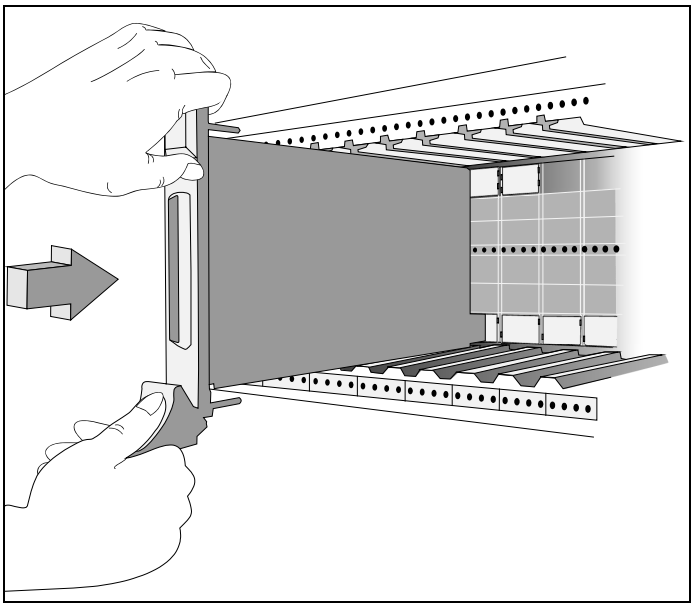

- If there is a screw at the front panel of the board, fasten the board at the upper part of the housing with it.

NOTICE!
To pull the board out of the rack, the fold-away handle (if available) at the front panel has to be pushed slightly upwards. After that, you can pull out the board.

3.3 Connecting the accessories

3.3.1 Connection of the screw terminal panel

Between the boards **APCIe-1016, APCIe-15xx** or **CPCIs-1532** and the peripherals, digital signals are exchanged via the screw terminal panel **PX901-DG** or the relay output board **PX8500-G**[1] and the cable **ST010, ST011** or **ST021**, which needs to be connected to the 37-pin D-Sub connector of the board. In terms of electromagnetic compatibility (EMC), these cables have the following properties:

- Metallised connector housing
- Shielded cable
- Cable shield folded back over insulation and firmly screwed on both sides to the connector housing.

To operate the digital outputs of the **APCIe-15xx** or **CPCIs-1532**, an external supply voltage is required (see Chapter 7.4.2). The screw terminal panel **PX901-DG** and the relay output board **PX8500-G** enable this supply voltage to be connected.

Fig. 3-6: APCIe boards: Connection of the screw terminal panel PX901-DG

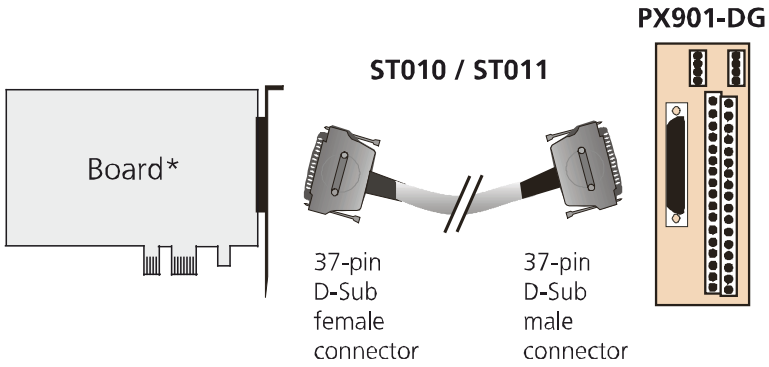

* **APCIe-1016, APCIe-1502, APCIe-1516** and **APCIe-1532**

[1] **APCIe-15xx** and **CPCIs-1532**

Fig. 3-7: APCIe-1502, APCIe-1516 and APCIe-1532: Connection of the relay output board

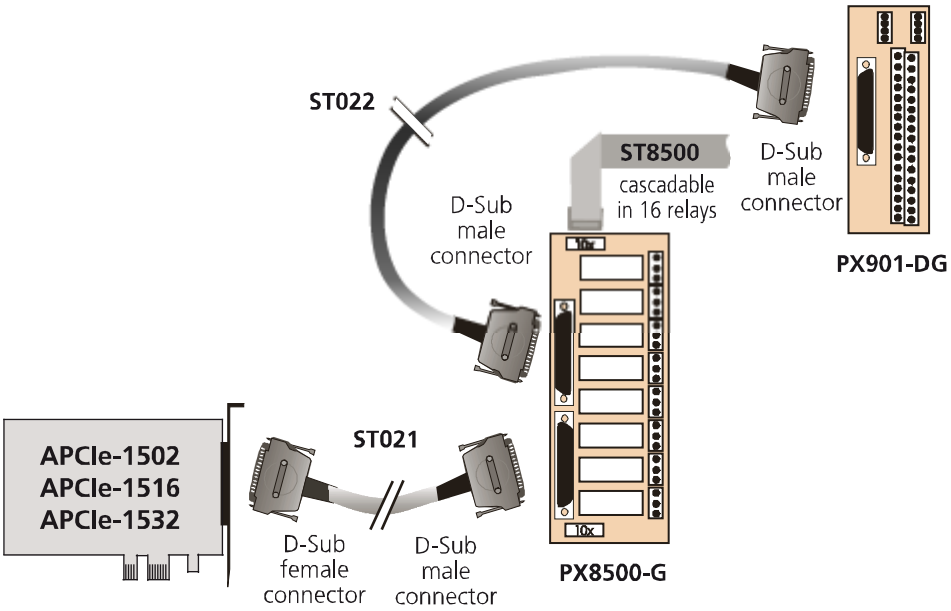

Fig. 3-8: CPCIs-1532: Connection of the screw terminal panel PX901-DG

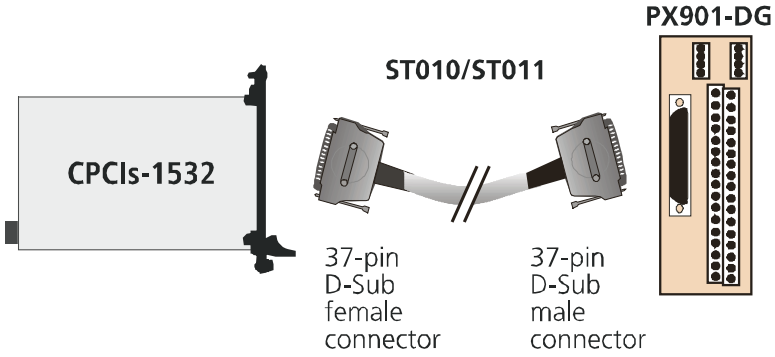

Fig. 3-9: CPCIs-1532: Connection of the relay output board PX8500-G

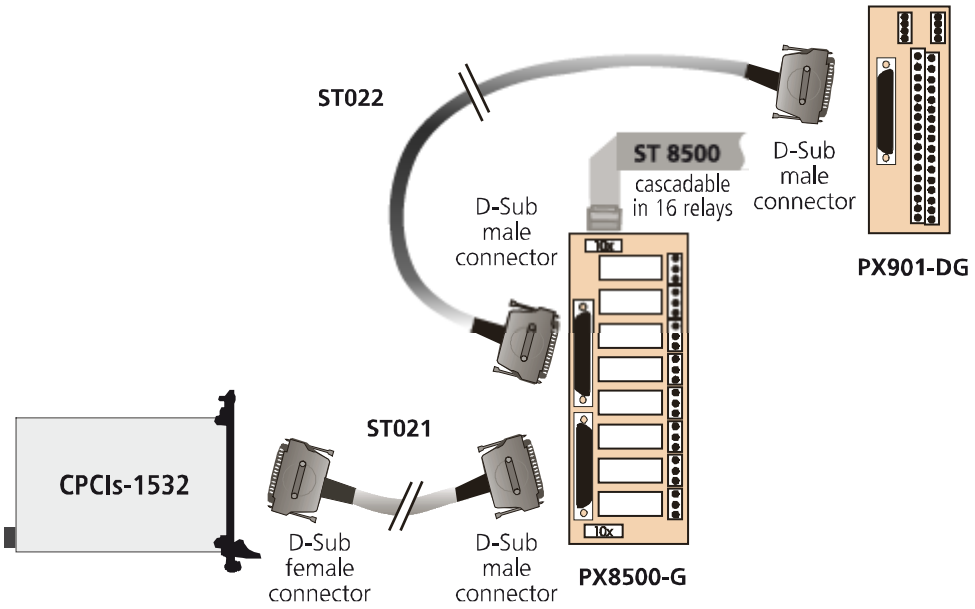

3.3.2 Pin assignment

Fig. 3-10: APCIe-1016: 37-pin male connector (digital inputs)

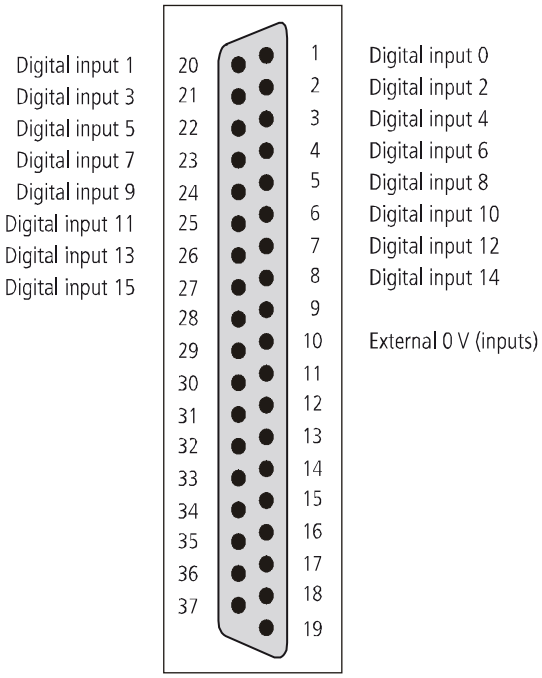

Fig. 3-11: APCIe-1502, APCIe-1532 and CPCIs-1532: 37-pin male connector (digital I/O)

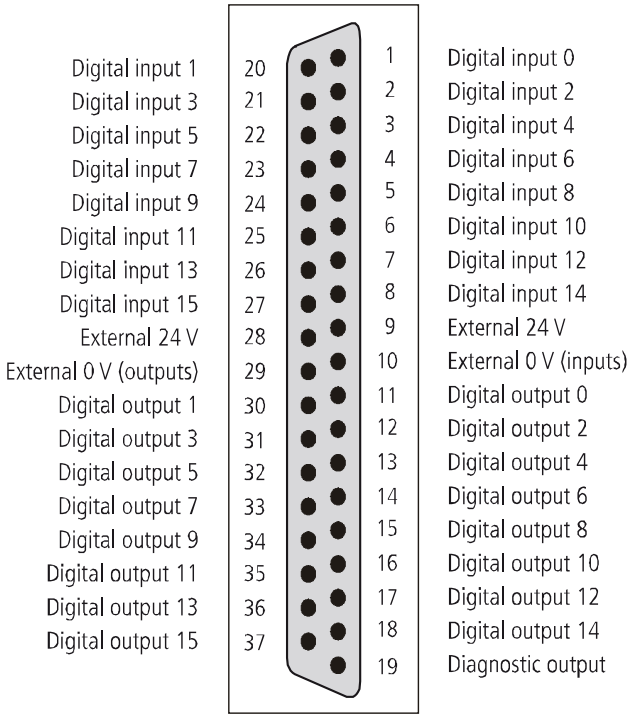

Fig. 3-12: APCIe-1516: 37-pin male connector (digital I/O)

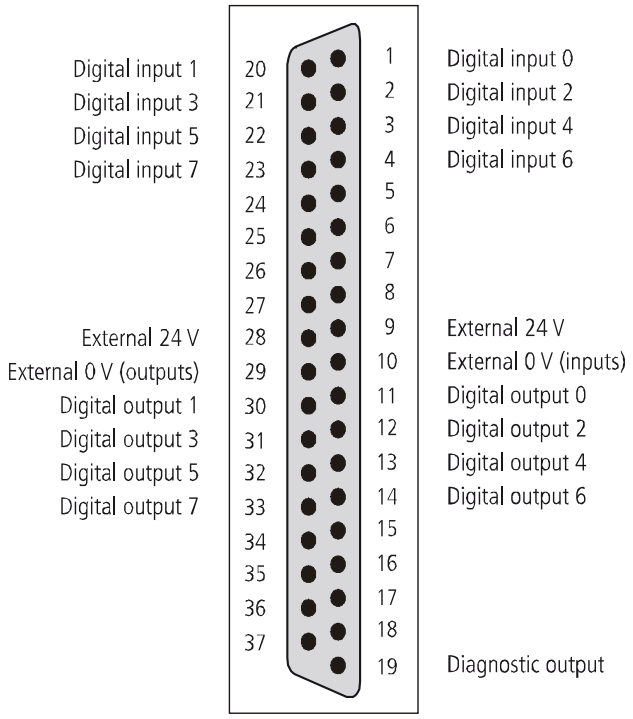

3.3.3 Connection example

Fig. 3-13: Connection example

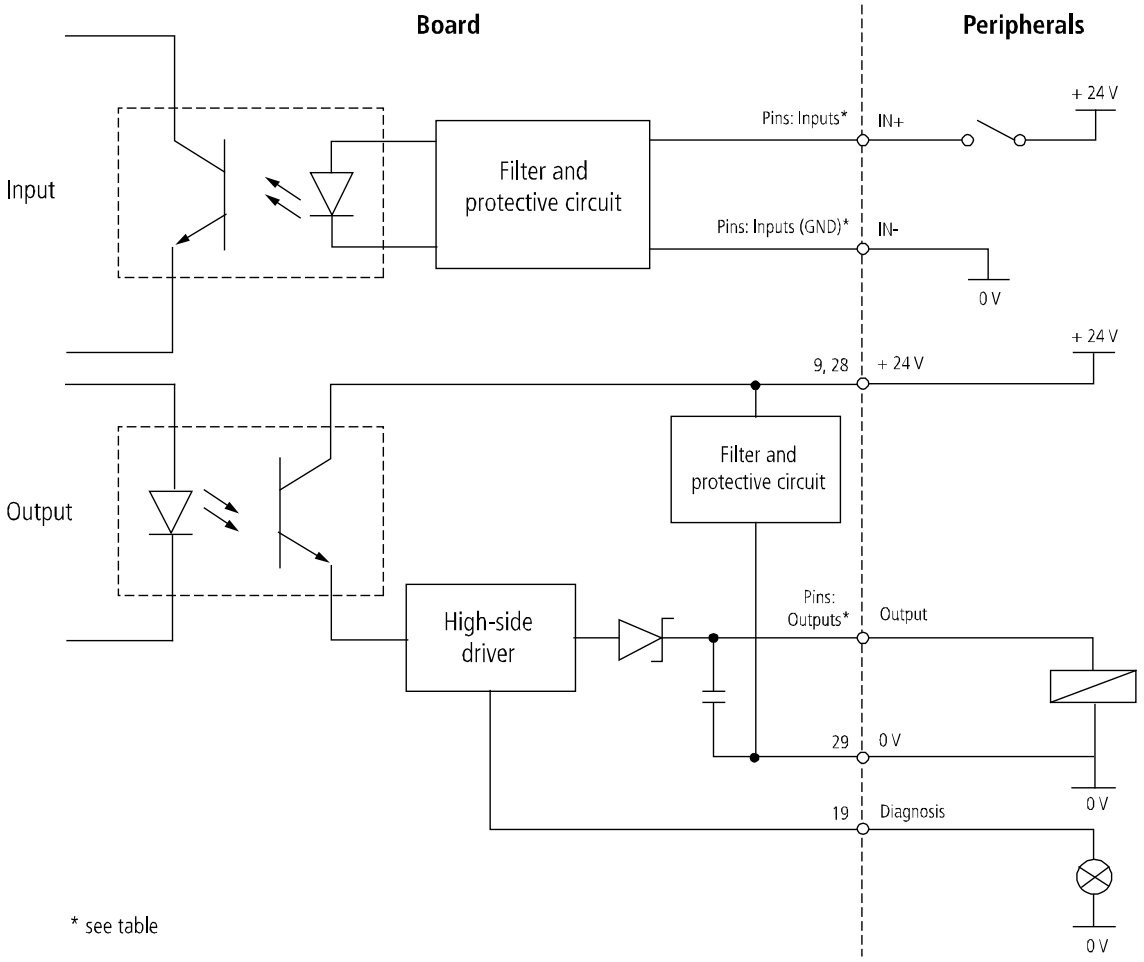

Table 3-1: Connection example: Pins (inputs)

Board	Pins: Inputs	Pins: Inputs (GND)
APCIe-1016, APCIe-1502, APCIe-1532, CPCIs-1532	1-8, 20-27	10
APCIe-1516	1-4, 20-23	

Table 3-2: Connection example: Pins (outputs)

Board	Pins: Outputs
APCIe-1502, APCIe-1532, CPCIs-1532	1-8, 20-27
APCIe-1516	1-4, 20-23



NOTICE!
Please note that an external voltage source is required for the digital outputs (see Chapter 7.4.2).

3.4 Driver installation

Information on how to select and download the appropriate driver can be found in the document "Quick installation PC boards" (see PDF link).

The installation of drivers of the type "ADDI-DATA Multiarchitecture Device Drivers 32-/64-Bit for x86/AMD64" as well as the installation of the corresponding samples is described in the installation instructions (see PDF link).

4 Function description

4.1 Digital inputs

The digital inputs acquire external signal states. The input information is loaded as a numeric value in a memory cell of the system via the driver function. This numeric value represents the status of the input signals.

The inputs correspond to the 24 V industry standard (DIN EN IEC 61131-2):

- Logic “1” corresponds to an input voltage ≥ 19 V.
- Logic “0” corresponds to an input voltage ≤ 14 V.

All inputs of the board have a common ground line: “External 0 V” (pin 10 of the 37-pin D-Sub connector).

The current demand for each input is 2 mA or 6.6 mA at nominal voltage (see Chapter 7.4.1).
The maximum input voltage is 30 V.

NOTICE!
The mains supply for the external power supply of the board must deliver at least the power that is required for your application.

The input signals are filtered by TVS diodes, Z-diodes, RC filters and opto-couplers. In this way, the effect of inductive and capacitive noise is reduced.

The board does not require initialisation to directly read the digital input information. The data is immediately available after power-on.

Fig. 4-1: Digital input stage

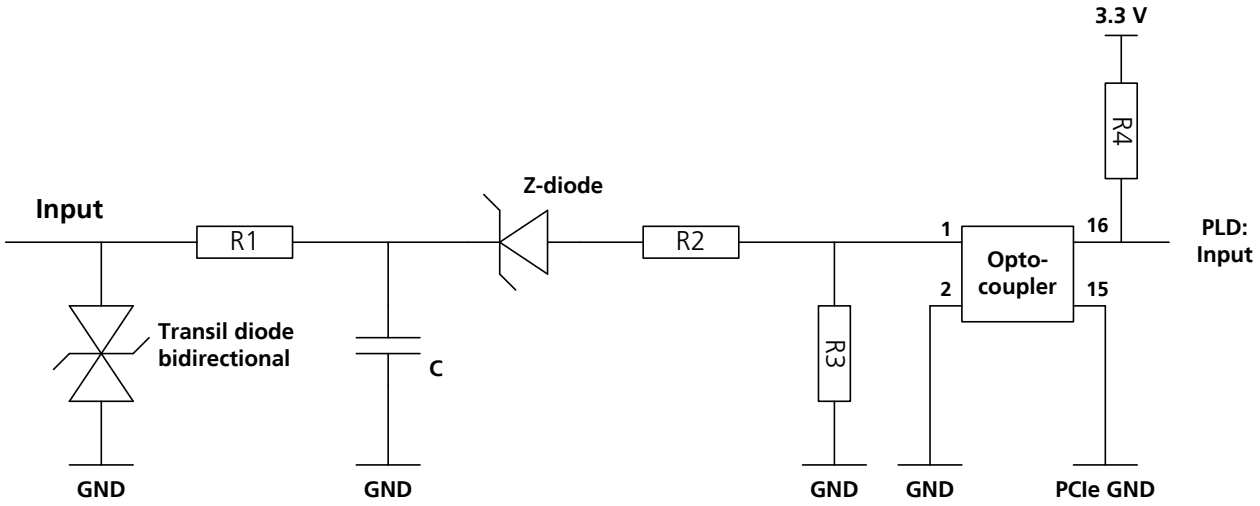

4.2 Digital outputs

For the digital outputs, positive logic is used:

- Logic “1”: Set output through software
- Logic “0”: Reset output.

The outputs switch the “External 24 V” outwards to the load. One end of the load is connected to “External 0 V (outputs)”. All outputs have a common ground line: “External 0 V” (pin 29 of the 37-pin D-Sub connector).

The maximum supply voltage is 36 V. Each output can switch a current of 500 mA. The current per eight outputs is limited to 1.5 A by a polyswitch fuse element.



NOTICE!
The mains supply for the external power supply of the board must deliver at least the power that is required for your application.

Characteristics of the outputs:

- Short-circuit protection relating to ground: The output is switched off.
- Protection against overtemperature: The output driver is switched off.
- If the supply voltage drops, the outputs are switched off (shutdown logic).
- Diagnostic feedback: short-circuit, overtemperature
- The outputs are suited for switching ohmic, capacitive and inductive loads.

TVS diodes, C-filters and opto-couplers filter noise on the peripheral side. In this way, the effect of inductive and capacitive noise on the system bus side is reduced or eliminated. Possible noise emitted by the output driver is also reduced by C-filters.

The board does not require initialisation to output the digital information. The outputs are reset to “0” after power-on (reset) and can be immediately programmed.

Diagnostic function

There are two diagnostic bits available:

- The CC diagnosis (ϑ-diagnosis) indicates that an output is short-circuited or that an output driver detects overtemperature. In these cases, the diagnostic output (pin 19 of the 37-pin D-Sub connector) is switched in addition.
- The V_{CC} diagnosis indicates that the external voltage supply is not available.

This error information is provided to the user program via an interrupt routine.

Fig. 4-2: Digital output stage

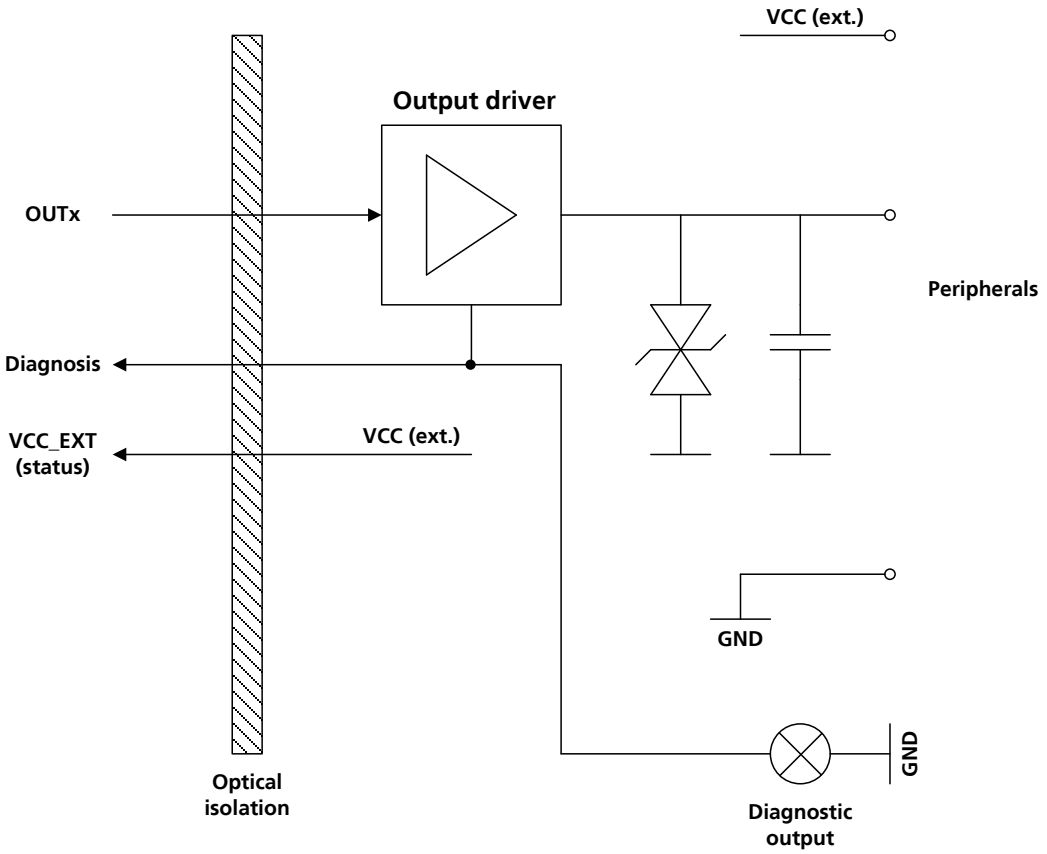

4.3 Interrupt

The boards **APCIe-1502, APCIe-1532** and **CPCIs-1532** have an interrupt line, which is assigned by the BIOS. Interrupt sources are the following:

- Interruptible inputs: channels 1-15
- Timer
- Watchdog: The outputs are reset.
- Counter overflow
- Voltage error (external voltage supply not available)
- Short-circuit, overtemperature (outputs).

The information from the interrupt sources is provided to the user program via an interrupt routine.

4.3.1 Interruptible inputs: Event logic

It is possible to mask an OR event with a rising or falling edge. To control the event logic, the following functions (set through software) are available:

- Activate/deactivate the interrupt function
- The interrupt source can be read back.
- The IRQ status register can be read back.
- The interrupt function is programmed via two registers which the events are masked with (hexadecimal).

4.3.2 Interrupt control

The event logic is blocked after an interrupt has been released. At the end of the interrupt routine, the event logic is enabled again. During the interrupt routine, the board does not react to changes to the input channels.
Another interrupt is released only after the original interrupt service routine has been processed and if an interruptible edge or status change takes place. The IRQ condition must be fulfilled for a period of at least 50 µs (with an input voltage of 24 V).

4.3.3 OR logic

Table 4-1: OR logic

	Inactive	Rising	Falling	Rising/Falling
Mode_1	0	1	0	1
Mode_2	0	0	1	1

The OR logic reacts to rising or falling edges. An interrupt is released if the following conditions are fulfilled:

- All interruptible inputs fulfil the conditions defined in Mode_1 and Mode_2.
- After a change of edges, the level must be kept for at least 50 µs (at 24 V). This input filter enables interfering signals (bouncing) to be suppressed.
- After an interrupt, a change of levels must occur at the interruptible inputs in order for the event logic to be enabled.

Example: Initialisation with OR logic

Interrupt if channel 2 detects a falling edge or if channel 3 detects a rising edge

Table 4-2: OR logic: Initialisation

Channel	15	...	5	4	3	2	1	0*
Binary values (channels)	32768	...	32	16	8	4	2	1
Mask (Mode_1)	0	...	0	0	1	0	0	0
Mask (Mode_2)	0	...	0	0	0	1	0	0

* Channel 0: Not interruptible

Mode_1= 0000 0000 0000 1000 (binary) = 0x8 (hex)
Mode_2= 0000 0000 0000 0100 (binary) = 0x4 (hex)

Example: Edge change interrupt

In the figures below, the following parameters are set:

1st condition:

Channels 2 and 3 react to rising edges (Mode_1 = 0xC and Mode_2 = 0x0).

Fig. 4-3: OR logic: Edge change interrupt: 1st condition

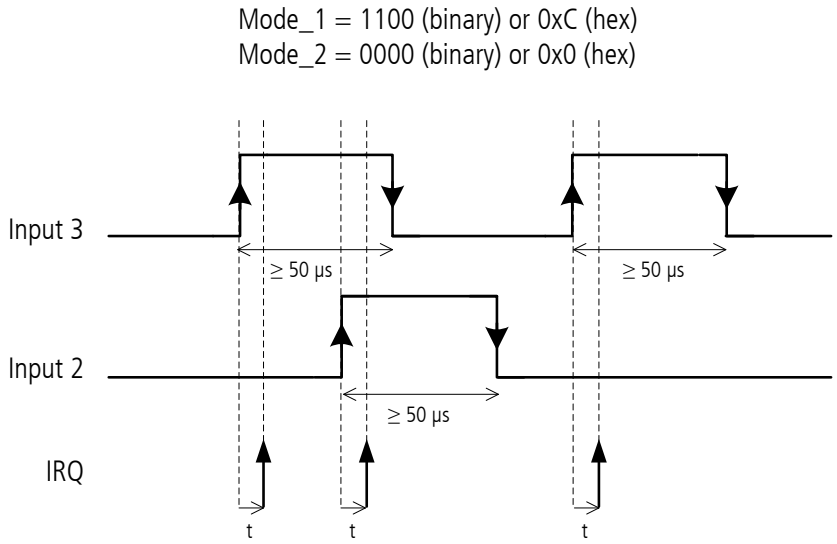

t ≤ 50 µs with an input voltage of 24 V

2nd condition:

Channels 2 and 3 react to falling edges (Mode_1 = 0x0 and Mode_2 = 0xC).

Fig. 4-4: OR logic: Edge change interrupt: 2nd condition

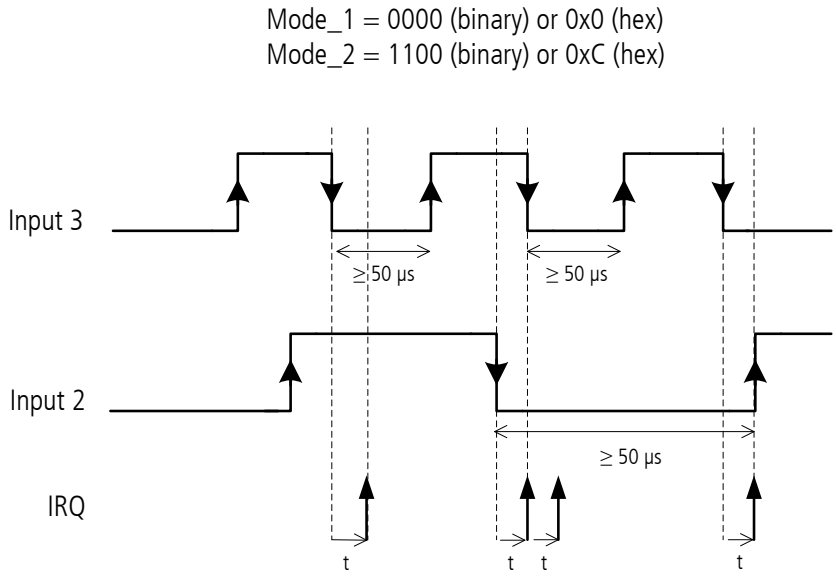

t ≤ 50 µs with an input voltage of 24 V

Table 4-3: OR logic principle for two channels (example)

Input 3 Mode_2, Mode_1	Input 2 Mode_2, Mode_1	Input 2 / Input 3
0,0	0,0	No interrupt
1,0	0,0	10* 10
0,1	0,0	10 10
1,1	0,0	10 10 10 10
0,0	1,0	01** 01
1,0	1,0	01 10 01 10
0,1	1,0	10 01 10 01
1,1	1,0	10 01 10 10 01 10
0,0	0,1	01 01
1,0	0,1	01 10 01 10
0,1	0,1	01 10 10 01
1,1	0,1	01 10 10 10 01 10
0,0	1,1	01 01 01 01
1,0	1,1	01 01 10 01 01 10
0,1	1,1	01 10 01 10 01 01
1,1	1,1	01 10 01 10 10 01 01 10

* 10: **Interrupt source:** The second input (channel 3) has released an interrupt.

** 01: **Interrupt source:** The first input (channel 2) has released an interrupt.

4.4 Timer, watchdog and counter

The boards **APCIe-1502, APCIe-1532** and **CPCIs-1532** each have two timers (0 and 1). One of them (timer 0) can also be programmed as a watchdog. The board **APCIe-1016** is fitted with a watchdog.

4.4.1 Timer

Independently from the PC clock, the timer provides a time base to synchronise operations, for example. The 12-bit timer is a downward counter which can release an interrupt after the programmed cycle time has elapsed (time-out).
The current timer value and the start value (reload value) as well as status and interrupt registers can be read back through software. The cycle time can be programmed in the range from 1 µs to 4095 s.

Example

Reload value = 7
Initialisation with a rising edge
Interrupt enabled

When the timer value is “0”, the reload value “7” will be reloaded with the next valid edge and an interrupt will be released.

Fig. 4-5: Timer (example)

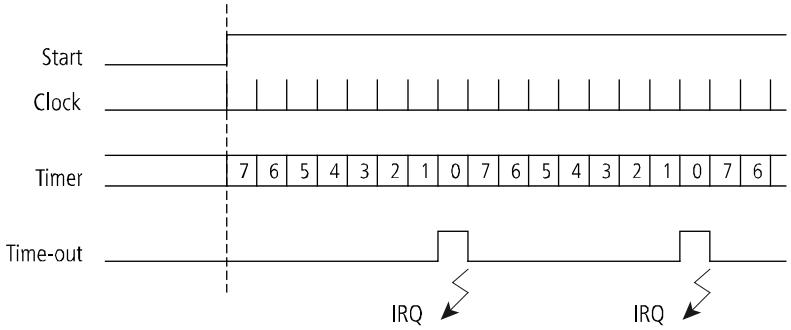

4.4.2 Watchdog

After the start of the watchdog, the reload value is reloaded every time the digital outputs are set (triggering). Triggering can also occur directly through a software command without setting the digital outputs again. The watchdog resets the outputs after the complete cycle time has elapsed (time-out), i.e. if the watchdog has not been triggered anew.
The operation states can be read back. The cycle time can be programmed in the range from 1 µs to 4095 s.

4.4.3 Counter

The boards are equipped with one **(APCIe-1532, CPCIs-1532)** or two **(APCIe-1502)** 16-bit counter inputs whose function is comparable to that of the Intel counter module 82C54. Each of these counters can be programmed through software.

Depending on the board, the signal inputs of the counters are channel 0 or channels 0 and 1 (see Chapter 7.4.3). Independently from the counter function, these channels can be used as normal digital inputs. The cut-off frequency is 100 kHz. There is no signal input for gate and trigger functions.

Each counter has the following characteristics:

- Two counting modes: The counter can be programmed as an upward or downward counter.
- An interrupt can be released when the reload value is reached or when the counter has run down.
- Reload value: 16-bit
- Clock: The counter counts with positive or negative edges or with each edge.
- Trigger function (software trigger): In upward mode, the counter is set to the start value “0” by this function (= clear function). In downward mode, the counter is set to the programmed reload value.
- Clear function: The count is deleted, i.e. the counter value is set to “0”.
- The two counters can be initialised, started or stopped at the same time through synchronous control.

a) Upward counter

The counter starts with the value “0” and increments with every valid edge. When the counter value is “reload value – 1”, the counter value will be reset to “0” with the next valid edge. In case of an overflow, an interrupt can be released.

- Clear function: Deletes the counter value (= 0).
- Trigger function: Sets the counter value (= 0).

Example

Reload value = 9
Initialisation with a rising edge
Interrupt enabled

When the counter value is “8” (reload value – 1), the counter value will be deleted with the next valid edge and an interrupt will be released, i.e. when the reload value is reached, the counter value is set to “0” and counting is continued.

Fig. 4-6: Upward counter cycle

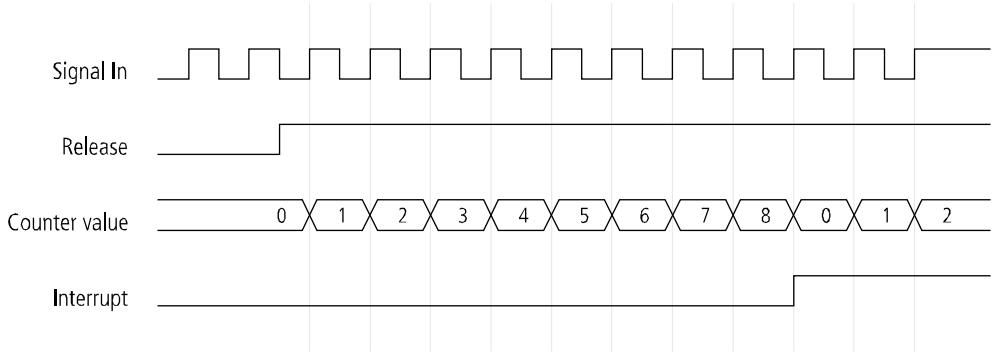

b) Downward counter

The counter starts with “counter value = reload value” and decrements with every valid edge. When the counter value is “0”, the reload value will be reloaded with the next valid edge. In case of an overflow, an interrupt can be released.

- Clear function: Deletes the counter value (= 0).
- Trigger function: Sets the counter value (= reload value).

Example

Reload value = 9
Initialisation with a rising edge
Interrupt enabled

When the counter value is “0”, the reload value “9” will be reloaded with the next valid edge and an interrupt will be released.

Fig. 4-7: Downward counter cycle

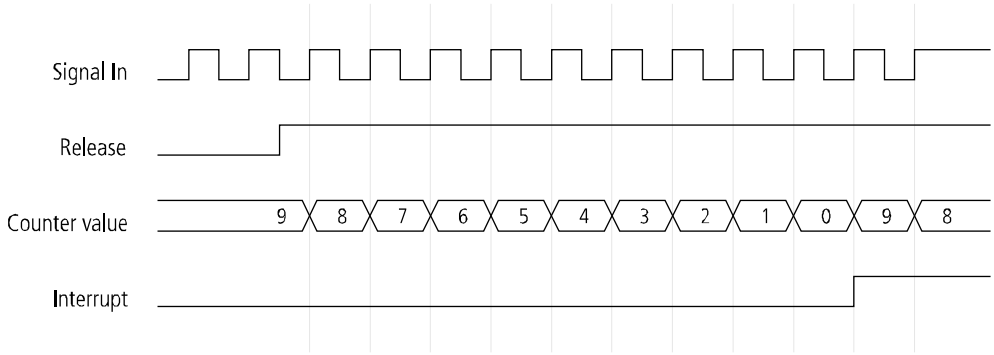

5 Standard software

The API software functions supported by the board are listed in an HTML document. A description of how to access the respective file can be found in the document “Quick installation PC boards” (see PDF link), in the chapter “Standard software”.

6 Return or disposal

6.1 Return

If you need to return your board, you should read the following checklist before.

Checklist for returning the board:

- Specify the reason for returning your board (e.g. exchange, modification, repair), the serial number of the board, the contact person in your company including his/her telephone extension and e-mail address, as well as the mailing address for a potential new delivery. You do not have to indicate the RMA number.

Fig. 6-1: Serial number



- Note down the serial number of the board.
- Place the board in an ESD protective cover. Then pack it in a cardboard box so that it is well-protected for shipping. Send the packed board together with your details to:

  ADDI-DATA GmbH
  Airpark Business Center
  Airport Boulevard B210
  77836 Rheinmünster
  Germany
- If you have any questions, do not hesitate to contact us:

  Phone: +49 7229 1847-0
  E-mail: info@addi-data.com

6.2 Disposal of ADDI-DATA waste equipment

ADDI-DATA organises the disposal of ADDI-DATA products that were put on the German market after 13 August 2005.
If you want to return waste equipment, please e-mail your request to: info@addi-data.com.

Boards that were delivered after 13 August 2005 can be recognised by the following label:

Fig. 6-2: Disposal: Label

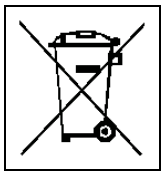

This symbol indicates the disposal of waste electrical and electronic equipment. It is valid in the European Union and in other European countries that have a separate collection system. Products carrying this symbol must not be treated as household waste.
For more detailed information on the recycling of these products, please contact your local citizens' office, your household waste collection service, the shop where you bought this product or the distributor you purchased this product from.

If you dispose of this product correctly, you will help to prevent damage that could be caused to the environment and to human health by inappropriate disposal. The recycling of materials will help to conserve our natural resources.

Disposal in other countries than Germany
Please dispose of the product according to the country-specific regulations.

7 Technical data and limit values

7.1 Electromagnetic compatibility (EMC)

The boards **APCIe-1016, APCIe-15xx**[1] and **CPCIs-1532** are suited for installation in personal computers (PCs) or CompactPCI Serial computers or corresponding hybrid systems which comply with the European EMC directive.

The boards **APCIe-1016, APCIe-15xx** and **CPCIs-1532** comply with the European EMC directive. The tests were carried out by a certified EMC laboratory in accordance with the standard DIN EN IEC 61326-1. The limit values as set out by the European EMC directive for an industrial environment are complied with.

The respective EMC test report is available on request.

7.2 Mechanical structure

Fig. 7-1: APCIe-1016 and APCIe-15xx: Dimensions

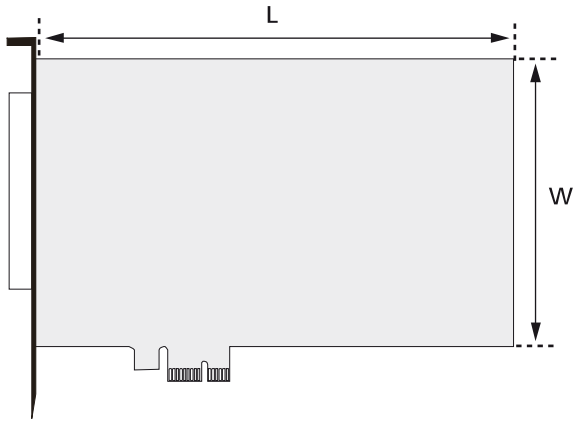

Fig. 7-2: CPCIs-1532: Dimensions



Dimensions (L x W):	**APCIe-1016, APCIe-15xx:** 149 x 99 mm **CPCIs-1532:** 158 x 100 mm

[1] **APCIe-15xx** = **APCIe-1502**, **APCIe-1516** and **APCIe-1532**

Weight:	**APCIe-1016:** 93 g **APCIe-15xx:** 105 g **CPCIs-1532:** 165 g	
Insertion into:	**APCIe board:** PCI Express slot **CPCIs board:** CompactPCI Serial slot	
Connection to peripherals:		
Front connector:	37-pin D-Sub male connector	
Accessories: [1]	see Chapter 3.3	
for digital I/O:	Cables:	**ST010, ST011** **ST021, ST022, ST8500**
	Screw terminal panel:	**PX901-DG**
	Relay output board:	**PX8500-G**

NOTICE!
The connection lines must be installed in such a way that they are protected against mechanical loads.

7.3 Versions

The boards **APCIe-1016**, **APCIe-15xx** and **CPCIs-1532** are available in the following versions:

Table 7-1: Versions

Version	Features
APCIe-1016	16 digital inputs (24 V)
APCIe-1502	16 digital inputs (24 V), 16 digital outputs (24 V), 2 counters (16-bit)
APCIe-1516	8 digital inputs (24 V), 8 digital outputs (24 V)
APCIe-1532	16 digital inputs (24 V), 16 digital outputs (24 V), 1 counter (16-bit)
APCIe-1532-12V	16 digital inputs (12 V), 16 digital outputs (12 V), 1 counter (16-bit)
CPCIs-1532	16 digital inputs (24 V), 16 digital outputs (24 V), 1 counter (16-bit)
CPCIs-1532-12V	16 digital inputs (12 V), 16 digital outputs (12 V), 1 counter (16-bit)

The specific version name can be found on the type label at the slot bracket or front panel of your board.

[1] Not included in standard delivery

7.4 Limit values I

Height:	2000 m over NN
Operating temperature:	0-60 °C (with forced ventilation) **CPCIs-1532:** -40 °C to +85 °C (with forced ventilation)
Storage temperature:	-25 °C to +70 °C **CPCIs-1532:** -40 °C to +85 °C
Relative air humidity at indoor installation:	50 % at +40 °C 80 % at +31 °C
Minimum PC requirements:	
System bus:	**APCIe board:** 1-/4-/8-/16-lane PCI Express according to PCI Express Base Specification, Revision 1.0a (PCI Express 1.0a) **CPCIs board:** PCI Express acc. to CompactPCI Serial Specification PICMG CPCI-S.0 R1.0
Link speed:	2.5 Gbit/s
Required space:	1 PCI Express slot or 1 CompactPCI Serial slot
Operating system:	Windows 10+7, Linux
Safety:	
Optical isolation:	1000 V
Shutdown logic (V_{CC} diagnosis):	when the external 24 V supply voltage drops below 7 V
Energy demand:	
Operating voltage from the PC:	**APCIe board:** 3.3 V ± 5 % **APCIe/CPCIs board:** 12 V ± 5 %
Current consumption (typ., without load)	see the following table

Table 7-2: Current consumption (typ., without load)

	APCIe-1016		APCIe-15xx, CPCIs-1532
Inputs inactive	295 mA ± 10 %	Inputs/outputs inactive	320 mA ± 10 %
8 inputs active	306 mA ± 10 %	8 inputs/outputs active	400 mA ± 10 %
16 inputs active	317 mA ± 10 %	16 inputs/outputs active	470 mA ± 10 %

7.4.1 Digital inputs

Number of inputs:	16 (common GND according to DIN EN IEC 61131-2) **APCIe-1516:** 8 (common GND according to DIN EN IEC 61131-2)
Interruptible inputs:	**APCIe-1502, APCIe-1532, CPCIs-1532:** 15 (channels 1-15)
Event logic:	OR logic (with fixed filter times)
Nominal voltage:	24 V
Filter/Protective circuit:	input filter, TVS diode, RC filter, Z-diode, opto-coupler

Optical isolation:	1000 V (via opto-couplers)
Input voltage:	0-30 V
Input current (at nominal voltage):	see Table 7-3
Max. input frequency (at nominal voltage):	see Table 7-3
Logic input levels:	UH_{max}: 30 V UH_{min}: 19 V UL_{max}: 14 V UL_{min}: 0 V
APCIe-1532-12V, CPCIs-1532-12V:	
Nominal voltage:	12 V
Input current (at nominal voltage):	see Table 7-4
Max. input frequency (at nominal voltage):	see Table 7-4
Logic input levels:	UH_{max}: 16 V UH_{min}: 9 V UL_{max}: 6 V UL_{min}: 0 V

Table 7-3: Input current and input frequency (at 24 V)

	APCIe-1016	APCIe-1502, APCIe-1532		APCIe-1516	CPCIs-1532	
	Channels 0-15	Channel 0	Channels 1-15	Channels 0-7	Channels 0-11	Channels 12-15
Input current (typ.)	2 mA	6.6 mA	2 mA	2 mA	2 mA	6.6 mA
Max. input frequency	5 kHz	100 kHz	5 kHz	5 kHz	100 kHz	100 kHz

Table 7-4: Input current and input frequency (at 12 V)

	APCIe-1532-12V		CPCIs-1532-12V	
	Channel 0	Channels 1-15	Channels 0-11	Channels 12-15
Input current (typ.)	3.2 mA	1.5 mA	1.5 mA	3.2 mA
Max. input frequency	100 kHz	5 kHz	100 kHz	100 kHz

7.4.2 Digital outputs

Number of outputs:	**APCIe-1502, APCIe-1532, CPCIs-1532:** 16 **APCIe-1516:** 8
Output type:	high-side (load to ground according to DIN EN IEC 61131-2)

Nominal voltage:	24 V
Filter/Protective circuit:	output filter, TVS diode, C-filter, opto-coupler
Optical isolation:	1000 V (via opto-couplers)
Supply voltage:	11-36 V
Current limit:	1.5 A (per 8 channels, via PTC)
Output current per output:	500 mA typ.
Short-circuit current per output:	1.5 A typ. (pulse current) shutdown logic at 24 V, R_{Load} < 0.1 Ω
R_{DS} ON resistance:	0.2 Ω max. at 25 °C
Start-up time:	I_{out} = 0.5 A load = resistance: 50 µs
Shutdown time:	I_{out} = 0.5 A load = resistance: 75 µs
Overtemperature (shutdown):	135 °C (output driver)
Temperature hysteresis:	15 °C (output driver)
CC diagnosis:	at overtemperature of one or more outputs

7.4.3 Timer, watchdog and counter

Timer (interruptible)

Number:	**APCIe-1502, APCIe-1532, CPCIs-1532:** 2 (timers 0 and 1)
Resolution:	12-bit
Time base:	µs, ms, s (programmable)
Time value range:	1 to 4095
Tolerance:	≤ 1 µs, ms, s

Watchdog

Number:	**APCIe-1502, APCIe-1532, CPCIs-1532:** 1 (timer 0 as a watchdog) **APCIe-1516:** 1
Resolution:	12-bit
Time base:	µs, ms, s (programmable)
Time value range:	1 to 4095
Tolerance:	≤ 1 µs, ms, s

Counter (interruptible)

Number:	**APCIe-1502:** 2 **APCIe-1532, CPCIs-1532:** 1
Resolution:	16-bit
Counter inputs:	**APCIe-1502:** channels 0-1 (counters 0-1) **APCIe-1532, CPCIs-1532:** channel 0 (counter 0)
Cut-off frequency:	100 kHz
Reload value:	software-programmable
Upward/downward counter:	software-programmable

8 Appendix

8.1 Glossary

Data bus
The data bus basically consists of several lines (or pins) through which the processor sends and receives data. The volume of data that can be transmitted simultaneously depends on the number of data lines. In other words: The more pins the bus has, the more efficient it is.

Driver
A driver is a series of software instructions written specifically to manage particular devices.

Edge
Edges can either be rising or falling.
Logic levels are defined for processing and displaying information. In binary switches, voltages are used for digital values. Here, the two voltage ranges “H” (high) und “L” (low) represent the information. The “H” range is closer to plus infinity; the “H” level corresponds to digital 1. “L” denotes the range closer to minus infinity; the “L” level corresponds to digital 0. The rising edge is the transition from the status “0” to “1”; the falling edge is the opposite transition.

EMC
= Electromagnetic Compatibility

According to the European EMC Directive, electromagnetic compatibility is “the ability of equipment to function satisfactorily in its electromagnetic environment without introducing intolerable electromagnetic disturbances to other equipment in that environment.”

ESD
= Electrostatic Discharge

On non-conductive surfaces, an electric charge is conducted away very slowly. If the dielectric strength is overcome, there is a fast potential equalisation between the surfaces involved. The often very sudden equalisation process is referred to as electrostatic discharge (ESD).

Currents of up to 20 A may occur in this process.

Ground line
Ground lines should not be seen as potential-free return lines. Different ground points may have small potential differences. This is always true with large currents and may cause inaccuracy in high-resolution circuits.

Input level
The input level is the logarithmic ratio between two electrical values of the same type (voltage, current or power) at the signal input of any receiving unit. This unit is often configured as a logical level related to the input of the circuit. The input voltage corresponding to logic “0” is between 0 V and 15 V and the voltage corresponding to logic “1” is between 17 V and 30 V.

Interrupt
= IRQ.

An external event indicating that the CPU should suspend its current task to service a designated activity.

Level
Logic levels are defined for processing and displaying information.
In binary switches, voltages are used for digital values. Here, the two voltage ranges “H” (high) und “L” (low) represent the information.

The “H” range is closer to plus infinity; the “H” level corresponds to digital 1. “L” denotes the range closer to minus infinity; the “L” level corresponds to digital 0.

Limit value
Exceeding the limit values, even for a short time, can easily result in the destruction of the component or the (temporary) loss of functionality.

Operating voltage
The operating voltage is the voltage to the device in sustained operation. It must not exceed the maximum sustained voltage, and all unfavourable operating conditions, such as possible mains power surges for over a minute when the device is switched on, must be taken into account.

Optical isolation
Optical isolation means that there is no flow of electrical current between the circuit to be measured and the measuring system.

PCI Express
This is a parallelisable serial process for switched point-to-point connections. Unlike PCI bus, PCIe is not a parallel bus but a serial point-to-point connection. Data transfer is via so-called lanes comprising a line pair for transmission and a second pair for receiving. Individual components are connected via switches. PCIe is also hot-plug compatible, which allows (defective) expansion boards to be replaced in operation – a feature much in demand in the server area.

Protective circuit
A protective circuit is set up on the actuator side to protect the control electronics and provide adequate EMC safety. The simplest protective circuit involves connecting a resistor in parallel.

PTC
= Positive Temperature Coefficient

The best-value resistance sensors are either specified as PTC or NTC thermistors. A PTC thermistor has a positive temperature coefficient, hence, “PTC”.

Resolution
The resolution indicates how precisely a signal or value is held within the computer.

Short-circuit
A short-circuit exists between two terminals of an electric circuit if the relevant terminal voltage is zero.

Short-circuit current
A short-circuit current is the current between two short-circuited terminals.

Timer
A timer is used for adjusting time-dependent program processes between the processor and peripheral devices. It contains counters that are mostly independent of each other and can be programmed like a programmable I/O module via a control word register for different operating types.

Trigger
A trigger is a pulse or signal for starting or stopping a special task. Triggers are often used for controlling data acquisition.

TVS
= Transient Voltage Suppression

8.2 Index

Accessories 37
  Connection 17
Block diagrams 11
Board
  Insertion 13
Connection example 21
Country-specific regulations 8
Dimensions 36
Disposal 35
Driver installation 22
EMC 36
Features 10
Function description
  Counter 31
  Digital inputs 23
  Digital outputs 24
  Interrupt 25
  Timer 30
  Watchdog 30
Glossary 41
Handling 8
Intended use 7
Interrupt
  Control 26
  Edge 26
  Event logic 26
  OR logic 26
Limit values 38
Pin assignment 19
Repair 34
Return 34
Slot type 13, 15
Standard software 33
Technical data 36
Update
  Drivers 9
  Manual 9
Usage restrictions 7
User
  Qualification 8
Versions 37

9 Contact and support

Do you have any questions? Write or phone us:

Address: ADDI-DATA GmbH
Airpark Business Center
Airport Boulevard B210
77836 Rheinmünster
Germany

Phone: +49 7229 1847-0
Fax: +49 7229 1847-222

E-mail: info@addi-data.com

Manual and software download from the Internet:

https://drivers.addi-data.com